PREMIER TECH

OWNER'S MANUAL AND INSTALLATION GUIDE

REWATEC™

SAF Wastewater Treatment Plants

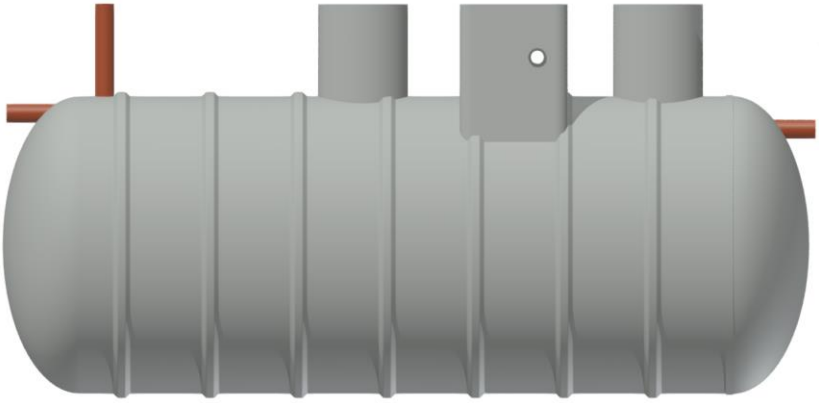

Multi-Tank Series

UK CA CE bsi ISO 9001 Quality Management Systems CERTIFIED ISO 14001 Environmental Management CERTIFIED

Owner's Manual & Installation Guide

Rewatec Submerged Aerated Filter
SAF Sewage Treatment Plant

Applicable To:

Two Tank CSAF N20			CSAF350	CSAF400	CSAF500
Two Tank CSAF N10	CSAF250	CSAF300	CSAF350	CSAF400	
Two Tank CSAF N05	CSAF250	CSAF300	CSAF350		
Three Tank CSAF N20			CSAF600		
Three Tank CSAF N10		CSAF500			
Three Tank CSAF N05	CSAF400				

Manual Version OM0010 Rev 2

Created On: February 2022

Installers: To Safeguard Warranty Please Ensure You Are Using The Latest Installation Manual

Customer Checklist

Complete Installation Record

Page 4

Register Your Warranty

Page 5

See Maintenance Schedule

Page 6–7

Familiarise Yourself With This Manual

Page 9>

Installation Record

Please record details of your SAF tank installation here and keep this document in a safe place.

Unit Installed (Please Circle)

Two Tank CSAF N20			CSAF350	CSAF400	CSAF500
Two Tank CSAF N10	CSAF250	CSAF300	CSAF350	CSAF400	
Two Tank CSAF N05	CSAF250	CSAF300	CSAF350		
Three Tank CSAF N20			CSAF600		
Three Tank CSAF N10		CSAF500			
Three Tank CSAF N05	CSAF400				

Serial Number:

Commissioning Date:

Commissioning Company

Name: ----------

Address: ----------

Contact: ----------

Service Company

Name: ----------

Address: ----------

Contact: ----------

If you require assistance finding a service company, please contact Premier Tech. Your warranty is invalidated if you do not keep to a regular servicing schedule.

PT Water and Environment UK

+44 (0) 191 587 8650
sales.ptwe.uk@premiertech.com
PT-WaterEnvironment.co.uk

WARRANTY

Thank you for purchasing a Premier Tech product.

25 YEAR WARRANTY

To activate your warranty complete the form below to receive your warranty certificate by email:

premiertechaqua.com/en-gb/warranty-activation

- Your SAF treatment plant is supplied with a 25-year parts and workmanship guarantee.
- This warranty is dependent upon the plant being installed, operated and maintained in accordance with this Installation, Operation and Maintenance manual.
- The Blower supplied with your Treatment Plant contains serviceable parts; these MUST be replaced, by a suitably qualified person, in line with the manufacturers operation and maintenance guide supplied.
- Proof of correct installation and plant maintenance (servicing) including purchase of serviceable parts MUST be retained, as these will be required in the event of any warranty claim.

Failure to comply with the above Terms and Conditions will invalidate the warranty.

Premier Tech Water & Environment Ltd accepts no liability for any damage or loss, including consequential loss, caused by the failure of any equipment supplied.

NB: The final effluent pump on the pumped discharge models is covered by a 12-month guarantee.

Rewatec SAF Maintenance Schedule

Details of servicing & maintenance requirements are located within this manual. Please use this page to record your tanks services and maintenance.

Your warranty is invalidated if you do not keep to a regular servicing schedule.

6 Month Check
Date:

Servicing Company:

Notes:

1st Annual Service
Date:

Servicing Company:

Notes:

2nd Annual Service
Date:

Servicing Company:

Notes:

3rd Annual Service
Date:

Servicing Company:

Notes:

4th Annual Service
Date:

Servicing Company:

Notes:

5th Annual Service
Date:

Servicing Company:

Notes:

6th Annual Service
Date:

Servicing Company:

Notes:

7th Annual Service
Date:

Servicing Company:

Notes:

Rewatec SAF Maintenance Schedule

8th Annual Service
Date:

Servicing Company:

Notes:

9th Annual Service
Date:

Servicing Company:

Notes:

10th Annual Service
Date:

Servicing Company:

Notes:

11th Annual Service
Date:

Servicing Company:

Notes:

12th Annual Service
Date:

Servicing Company:

Notes:

13th Annual Service
Date:

Servicing Company:

Notes:

14th Annual Service
Date:

Servicing Company:

Notes:

15th Annual Service
Date:

Servicing Company:

Notes:

Additional Resources

British Water's A Guide For Users Of Packaged Wastewater Treatment Plants can be found on the British Water website.

https://www.britishwater.co.uk

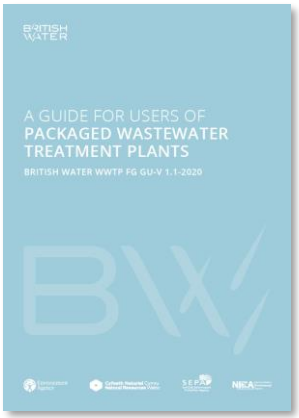

Contents

Quick Installation Guide 10

Introduction 11
Design Dimensions 12
Health & Safety 14
Process & Plant Description 18

Installation Instructions 22
General 22
Deep Invert Units 23
Tank Installation 23
Electrical Installation 24
Air Distribution Adjustment 24
Airlifts 25

Plant Start-Up & Shutdown Procedures 26
Start-Up & Commissioning 26
Shutdown Procedure 26

Maintenance Schedule 28
Primary Tank De-Sludging 28
Humus Tank De-Sludging 28
Operation Inspections 28

Appendix A – Fault Finding 30
Appendix B – Equipment Specification 32
Appendix C – De-Sludging Instructions 36
Appendix D – Dimensions & Mechanical Installation 34

Quick Installation Guide

Do:

- ➔ Read this O&M Manual for full details.
- ➔ Use the correct installation guidance for the shell class of the treatment plant.
    - UTG9501 Granular Surround for Class 1 Shells
    - UTG9502 Concrete Surround for Class 1 and Class 2 Shells
- ➔ Take care when offloading the unit – internal pipework could be damaged!
- ➔ Ensure adequate ventilation, see section "Installation Instructions".
- ➔ Ensure adequate point of discharge either into a soakaway or into a flowing watercourse, see section "Installation Instructions".
- ➔ Provide a cable duct, or install an armoured cable to the control panel, see "Electrical Installation".
- ➔ Isolate the main power supply to the control panel before opening it; panel isolator has to be fully in the "OFF" position.
- ➔ Incorporate a miniature circuit breaker (MCB) in the power supply to the unit. Remember that if the MCB trips the unit will not be running, so a dedicated MCB is recommended.

Do not:

- ➔ Install the treatment plant deeper than the supplied access turrets. (i.e. do **not** extend the turrets)
- ➔ **Install a Class 2 Shell plant in granular backfill. Class 2 shells are suitable for Concrete Backfill only.**

Introduction

Congratulations on purchasing your Rewatec SAF Sewage Treatment Plant. It is designed and manufactured entirely in the UK. The plant will provide long and trouble-free operation provided the simple maintenance procedures laid out in this manual are regularly carried out.

This manual is supplied with your unit for the provision of installation, operating and maintenance instructions. In the unlikely event of problems occurring with your plant you may either refer to this manual, your equipment supplier or directly to Premier Tech Water & Environment UK.

The plant comprises three treatment stages; a primary settlement zone, an aerobic biological zone and a secondary clarification zone. The design combines the benefits of a well-proven treatment process with our engineering expertise to produce a high-quality system that is robust and reliable.

Your attention is drawn to the 'Health and Safety' section at the beginning of this manual. It is IMPERATIVE that you read these instructions BEFORE working on the plant.

The plant has been designed to treat the volume and strength of sewage specified in the original quotation. Please note the following points:

- The maximum design loading of wastewater must not be exceeded (see loading table for details).
- Surface water must not enter the plant.
- High volume discharges from swimming pools or Jacuzzi's must not enter the plant.
- Large quantities of chemicals such as water softener, disinfectants, strong acids or alkalis, oil and grease, pesticides or photographic chemicals must not enter the system.
- Do not use chemical or biological emulsifiers in grease traps.
- The SAF structural shell can be either a Class 1 suitable for granular backfill or Class 2 suitable for concrete backfill. Please ensure that the correct installation instructions are followed dependent on the tank type.

If you have any doubt about a particular substance, please contact Premier Tech or your local supplier for further advice.

Design, Dimensions & Designation

This Operation and Maintenance Manual includes descriptive literature, specifications and drawings relating to the principal mechanical and electrical equipment incorporated in the unit. It is the responsibility of the operator to read and fully understand these instructions before installing, commissioning or operating the plant. The treatment units are designed for the following maximum loadings:

Table 1 SAF Loading Rates

Process Loadings	CSAF250	CSAF300	CSAF350	CSAF400	CSAF500	CSAF600
Population Equivalent (P.E.)	**250**	**300**	**350**	**400**	**500**	**600**
Max. Hydraulic Load – DWF (l/day)	37500	45000	52500	60000	75000	90000
Max. Organic Load ($gBODB_{5B}$/day)	15000	18000	21000	24000	30000	36000
Max. Ammonia Nitrogen Load (g/d)	2000	2400	2800	3200	4000	4800
Peak Flow – max. for 10 minutes (l/sec)	1.30	1.56	1.82	2.08	2.60	3.12
Max. De-sludge Frequency (days) at full plant loading	60	60	60	60	60	60

Table 2 CSAF N20 Physical Characteristic

N20	CSAF350	CSAF400	CSAF500	CSAF600
O/A Diameter (m)	2.5	3.0	3.0	3.0
Depth from Inlet Invert to base (m)	2.3	2.8	2.8	2.8
Pipework Fittings (mm)	160	160	160	160
Weight, empty (tonnes)	TBC	TBC	TBC	TBC

Table 3 CSAF N10 Physical Characteristic

N10	CSAF250	CSAF300	CSAF350	CSAF400	CSAF500
O/A Diameter (m)	3.0	3.0	3.0	3.0	3.0
Depth from Inlet Invert to base (m)	2.8	2.8	2.8	2.8	2.8
Pipework Fittings (mm)	160	160	160	160	160
Weight, empty (tonnes)	TBC	TBC	TBC	TBC	TBC

Table 4 CSAF N05 Physical Characteristic

N05	CSAF250	CSAF300	CSAF350	CSAF400
O/A Diameter (m)	3.0	3.0	3.0	3.0
Depth from Inlet Invert to base (m)	2.8	2.8	2.8	2.8
Pipework Fittings (mm)	160	160	160	160
Weight, empty (tonnes)	TBC	TBC	TBC	TBC

Health and Safety

(Important - Please Read This First.)

United Kingdom Health and Safety At Work Act 1974.

Section 6(a) of this Act requires manufacturers to advise their customers on the safety and the handling precautions to be observed when installing, operating, maintaining and servicing their products.

The user's attention is therefore drawn to the following:

1. The appropriate sections of this manual must be read before working on the equipment.
2. Installation and servicing must only be carried out by suitably trained or qualified personnel.
3. Normal safety precautions must be taken and appropriate procedures observed to avoid accidents.
4. All works associated with the wastewater treatment plant must be adequately risk assessed and all appropriate control measures put in place prior to commencement of any works associated with the plant.

General non site-specific significant hazards that are associated with the installation and operation of the waste water/sewage treatment plant include but are not limited to:

- Explosive atmospheres
- Falls from working at height
- Confined space working
- Electrical Shock
- Asphyxiation
- Working near, in, or over water
- Exposure to dangerous substances; chemical and biological agents
- Being struck by falling objects
- Moving heavy loads
- Slips and trips
- Entrapment or crushing by a workplace vehicle
- Bad working positions, often in confined spaces
- Receiving injuries from hand tools
- Inhalation of contaminants
- Handling of rough materials
- Loud noise
- Vibration from tools or vibrating machinery

Refer to Premier Tech or your local supplier for technical advice or product information.

Safety

Before carrying out any maintenance work, the equipment must be electrically isolated.

Temporary barriers and warning signs should be erected around any open covers/manways as appropriate. **DO NOT** leave covers to manways open for any longer than is necessary.

On completion of works to the plant all access covers must be replaced.

Sewage gases are potentially hazardous. **DO NOT** enter the unit without proper training and undertaking a confined spaces risk assessment process, with all required equipment and personnel being present.

Health

It is the customer's responsibility to ensure that all necessary health and safety control measures as well as suitable protective clothing/equipment is available.

As a minimum it is recommended that the following Protective Equipment (PPE) is used:

- Overalls
- Gloves (waterproof, cut, tear and abrasive resistant)
- Waterproof safety boots
- Hard hat
- Breathing apparatus (where entry to the tank is required)

After operating and maintaining the plant it is imperative that a high level of personnel hygiene (hand washing etc.) is immediately undertaken.

Leptospirosis is a disease which can, in rare cases, be contracted from contact with sewage.
Two types of Leptospirosis infection affect people in the UK.

1. Weil's Disease – this is a serious and sometimes fatal infection that is transmitted to humans by contact with soil, water or sewage contaminated with urine from infected rats.

2. Hardjo-type Leptospirosis – this is transmitted from cattle to humans.

What are the symptoms?
Both diseases start with a flu-like illness with a persistent and severe headache, muscle pains and vomiting. Jaundice appears about the fourth day of the illness.

How might I catch it?
The bacteria can enter the body via cuts and scratches and through the lining of the mouth and throat or through the eyes.

How can I prevent it?

After having worked in contact with sewage or anything contaminated with sewage, wash your hands and forearms thoroughly with soap and water. If your clothes, boots or tools are contaminated with sewage, wash thoroughly after handling them.

- **Take immediate** action to wash thoroughly any cut, scratch or abrasion of the skin as soon as possible. Apply antiseptic to the wound, cover with cotton wool or gauze, and protect with a waterproof plaster.
- **DO NOT** handle food, drink or smoking materials without first washing your hands.

If you contract the symptoms described above after coming into contact with sewage, report it to your doctor immediately and advise him/her of the circumstances.

Sewer Gases

Sewage gases are potentially hazardous; it may be necessary to open the biozone treatment manhole cover to perform routine maintenance or to adjust the biozone air distribution system. **Take suitable precautions including venting of unit and the use of suitable personal protection equipment when engaged in these operations.** Work of this nature should not be conducted by an individual; there should be a minimum of two responsible individuals, one performing the task and one available in the event of an incident. All tasks and operations near the waste water treatment plant must be adequately risk assessed.

DO NOT enter the primary (septic) tank associated with the treatment system.

DO NOT leave the access/manhole covers to the plant open for any longer than is necessary. Temporary barriers and warning signs should be erected around any open covers or manways as appropriate. While the tanks are installed underground there is still a potential for falls from a height and drowning to occur should an individual fall through a manway access.

Responsibility

The owner of the Sewage Treatment Plant is entirely responsible for plant operation and ensuring that the effluent quality does not breach applicable Discharge Consent Standards.

The offloading of the treatment plant and the correct installation is the responsibility of the owner. It is strongly recommended that a contractor with an adequate understanding of drainage and sewer systems should install the plant.

Premier Tech can provide details of our service partners in your area who will be able to provide you with a quotation for servicing; Premier Tech does not engage in or provide operational maintenance and servicing services. The existence of a service agreement with a service company does not transfer responsibility for general maintenance that must be conducted in accordance with the accompanying instructions.

It is still also the owner/operator's responsibility to ensure that servicing and desludging of plant is carried out in accordance with the maintenance schedule.

The site suitability assessment, design and installation of soakaway and or final effluent drains remain the responsibility of the owner and should be completed prior to purchasing the treatment plant. Emptying of Primary Tanks and Humus Tanks in accordance with the recommended de-sludging schedule remains the responsibility of the owner, as does the prevention of the influx of surface water or backing up of the soakaways or treated effluent drains and as such are not covered by any service agreement.

Premier Tech shall not be liable for any damage or loss, including consequential loss, caused by the failure of any part of the equipment supplied.

Process and Plant Description

The Treatment Process – Submerged Aerated Filter Technology

The unit is specifically designed to treat domestic sewage and other biodegradable waste and comprises three treatment stages; an optional effluent pump sump is available should site topography require that treated effluent be pumped to the final disposal area/watercourse.

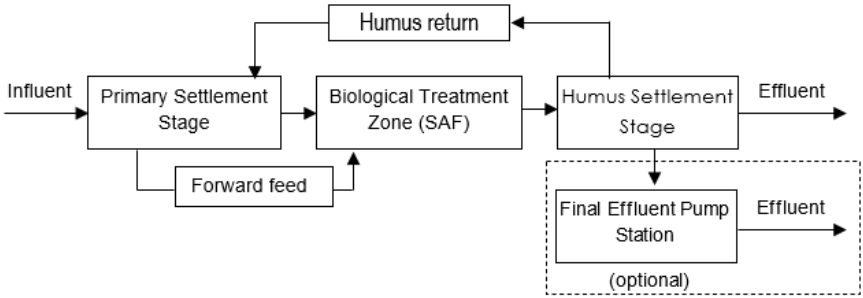

- Primary Settlement Stage
- Biological Treatment Zone (Biozone)
- Humus Settlement Stage (Secondary Settlement Stage)
- Final Effluent Pump Station (optional)

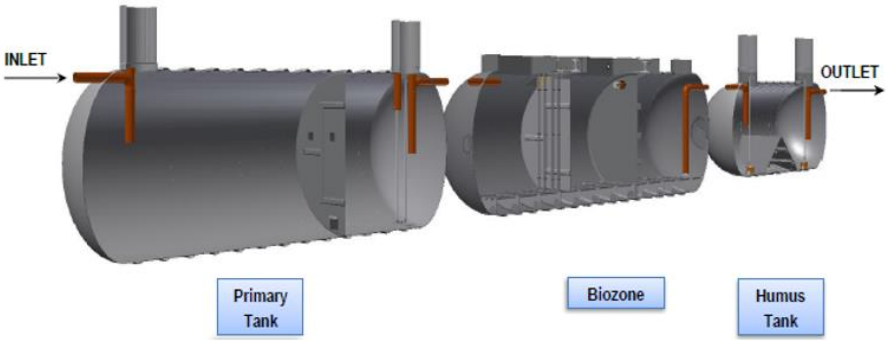

The system utilises micro-organisms to break down the sewage by processes very similar to those that occur in a garden compost heap. It is very important therefore, that toxic chemicals do not enter the system and "poison" the micro-organisms.

Raw sewage is first received in the Primary Settlement Stage, where large solids (primary sludge) separate and settle in the tank. These solids remain until the tank is "de-sludged" as described in the 'Maintenance' section of this manual.

The 'settled' liquor is displaced from the Primary Tank using an air lift and flows into the biological treatment zone. This incoming flow mixes with partially treated sewage within the biozone. This partially treated flow greatly dilutes the incoming sewage and prevents "shock" loads from upsetting the system.

Air blowers provide necessary oxygen for the micro-organisms to digest the nutrients in the bio-zone. Air is bubbled up through the bio-zone from distribution pipework in the bottom of the tank and in so doing generates a recirculating flow. As the liquid moves around in the biozone it is purified by the micro-organism biomass growing on the surface of the media. Excess biomass solids that fall from the media are transferred to the humus tank or final settling tank by displacement when new liquor enters the bio-zone from the PST.

In the Clarifier/Humus Tank (HT) solids settle to the bottom of the tank to form sludge. This sludge is transferred by pumping to the PST for co-settlement with the primary sludge. It is removed from the plant as part of normal PST desludging operation.

The fully treated liquid displaced from the humus tank is known as Final Effluent. It is suitable for discharge to a watercourse or drainage field subject to the requirements of the applicable Consent to Discharge Permit issued by the environmental regulator or relevant local authority. Where the final effluent cannot "naturally gravitate" away, an optional pump can be incorporated to lift the effluent to the point of discharge.

The Treatment Plant

The wastewater treatment plant is a single tank unit design containing the following components required for the biological treatment of domestic sewage:

a) The Tank Structure

The glass reinforced polyester (GRP) tank is supplied complete with pedestrian duty covers and access manways. Resin liners ensure it is completely impervious to sewage and stiffeners ensure a robust construction with a long service life. Access to the tank internals for normal maintenance is provided through manholes/access covers in order to allow:

- De-sludging of Primary Settlement and Humus Settlement stages.
- Inspection, Service and Maintenance of the air distribution pipework (incl. final effluent lift pump if applicable).

b) The Primary Settlement Stage

The Primary Settlement Stage forms an integral part of the tank structure. It is designed to settle out any large solids and other insoluble materials. The primary settling stage consists of a single chamber with an air lift to displace settled liquid to the biozone and a prefiltered overflow in case of emergency. Large solids settle to the bottom of the chamber, the forward feed air lift is protected from sending floating scum forward with a baffle around the air lift intake. This section requires de-sludging at the intervals detailed in Table 1 in Design, Dimensions & Designation.

c) The Biological Zone and Distribution Assembly

The submerged aerated media is contained within this zone. The media comprises loose profiles tubes which provide a very large specific surface area. Sewage and air is distributed within the media via the blower and air distribution pipework. This ensures that sufficient quantities of aerated sewage pass the biological effective surface area of the media.

d) Air Blower and Air Distribution Pipework Assembly

The Air Blower is located in a kiosk, remote from the plant and delivers air into the bio-zone and the air lifts as necessary.

e) Humus Settlement Stage

The Humus Settlement Stage/Tank (HT) is fed from the biological treatment zone. It is recommended that when desludging of the Humus Tank is required that it is de-sludged after the PST is emptied either by tanker or by transferring the contents of the HT to the empty PST.

f) Electrical Items

Before working on either the blower or the optional final effluent pump station the mains electrical supply must be isolated.

The blower is supplied with power via the electrical control panel; it is arranged to run continuously.

The optional final effluent Lift Pump is arranged to have constant power supply, however the pump itself will be activated through the integral float-switch.

A Warning Beacon is fitted to the electrical kiosk to provide warning of:

- Air Blower failure
- High air blower discharge pressure
- Low air blower discharge pressure

Installation Instructions

IMPORTANT! PLEASE READ HEALTH AND SAFETY INSTRUCTIONS BEFORE ATTEMPTING ANY WORK.

The following instructions are offered for guidance only. We can accept no responsibility for incorrect off loading or installation. Please refer to the correct installation guidance document for either concrete or granular backfill that is determined with reference to the structural shell classification of the treatment plant considered.

General

Before installing the tank, care has to be given on how to provide adequate ventilation across the plant. As each site is different we can offer the following advice as guidance only.

Ensure that an existing vent stack is in place or is supplied to the building(s) served by the treatment plant. Further, provide an air inlet by connecting a local low-level vent (cowl) to the 110mm spigot on the side of the tank turret. This will ensure aerobic conditions for the micro-organisms within the biozone.

The blower needs a supply of fresh air to keep oxygen levels high in the biozone. The blower is fed with air through filtered ventilation slots in the control kiosk. Care must be exercised when selecting the right location for the kiosk serving the treatment plant to ensure that there is sufficient air flow to serve the blowers and to ensure that the kiosk is adequately ventilated to prevent excessive temperatures developing in the kiosk.

In addition, care has to be given on selecting the right location for the treatment plant and how the final effluent is to be discharged; these should be determined prior to ordering the plant.

The contractor is responsible for off-loading all items of equipment with due regard to the following:

- **DO NOT** lift the tank if it contains water.
- **DO NOT** subject the unit to sharp impacts.

WARNING: The lifting procedures outlined below have been developed to ensure the safe handling of the unit. Failure to comply may result in damage to the unit and/or injury to site personnel. When working in a deep excavation, ensure all necessary safety precautions are taken to provide safe working conditions for site personnel. The only time anyone needs to be working at the bottom of the excavation is when levelling the base and ensuring that the first back-fill is correctly placed.

- **ALWAYS** use the lifting eyes on the top of the unit when lifting the plant.
- **NEVER** attempt to lift the unit by attaching lifting gear to the inlet/outlet pipe.

- **NEVER** wholly fill the sump with water before surrounding it in concrete, where applicable.
- **NEVER** partly or wholly surround the sump with concrete, where applicable, before filling it with water.

NOTE: Where concrete backfill is being used do not use vibrating pokers to compact the concrete.

NOTE: Where concrete backfill is used the installer is responsible for determining the concrete thickness and strength required for the actual ground conditions, taking into account the buoyancy of the unit when being de-sludged, external forces exerted by the water table, back-fill, traffic loads etc.

Facilities must be provided for cable entry into the unit, through the side of the access turret. The electrician responsible for the wiring should be consulted, to ensure a correctly sized duct is provided.

The installation should be carried out in accordance with the requirements of the Construction and Building Regulations. During the course of the installation, the following minimum equipment will be required:

- Normal construction equipment and plant.
- Where applicable concrete to 20 Newton/mm and 30-50 mm slump (initially 100 mm)
- Rivets and waterproof mastic or butyl tape for sealing the turret to the sump
- An adequate supply of fresh water to fill the sump at the same rate as backfilling.
- De-watering equipment as necessary.
- Lifting straps or ropes of the correct length and adequate safe working load (SWL)

Deep Invert Units

For all DEEP INVERT and VERY DEEP INVERT units please refer to Premier Tech for on-site assembly instructions and advice.

Tank Installation

The waste water treatment plant structural shell is available in two classes. A Class 1 shell is suitable for use with either granular or concrete backfill subject to site conditions and installation depth. A Class 2 structural shell must only be installed in concrete backfill, please ensure the use of the correct installation guidance for the applicable shell class of the treatment plant as set out below.

- UTG9501 Granular Surround for Class 1 Shells
- UTG9502 Concrete Surround for Class 1 and Class 2 Shells

Electrical Installation

It is not possible to state a specific installation configuration that would suit all sites. To ensure a safe and cost effective installation, the selection of current protection devices must remain the responsibility of the installer as the person best qualified to assess site conditions and supply configuration. It is therefore imperative that electrical installation of this equipment is entrusted to a fully qualified electrician; **failure to comply with the following could result in the invalidation of warranty:**

When installing the electrical supply the following points should be considered:

1. The supply to the unit should be provided through a dedicated circuit via isolation and protection devices consistent with the requirements for fixed equipment and in accordance with the latest regulations issued by the Institution of Electrical Engineers;

2. The supply to the unit should be fed through a dedicated MCB. Units fitted with the optional Final Effluent Pump Station use an additional feed to the pump isolator. Earth Leakage Devices provided for normal domestic protection must not form part of the supply circuit to this unit;

3. All connections made to the junction enclosure should be via correctly sized and rated glands;

4. Check all power terminations for tightness prior to commissioning. Loose connections will cause localised overheating with the possibility of fire. (Electrical connections can loosen in transit or through fixing methods used during installation).

Air Distribution Adjustment

The air distribution within the bio-zone is sensitive to the tank and consequently the air distribution manifolds being installed level. Ideally equal quantities of air should come from each of the distribution points, this can be judged quite effectively by observing the streams of bubbles from ground level above the biozone during the commissioning stage.

Each manifold is provided with a main shut off that can be adjusted to distribute more or less air to either manifold. Reducing the air flow to one manifold by partially closing one of the manifolds will increase the flow volume to the other manifold.

Each of the air distribution sparge pipes is fitted with a ball valve that can be used to adjust the air flow within each sparge pipe on the manifold. Should it transpire that there is an uneven distribution across the biozone the valves on the side with the larger volume of air can be partially closed resulting in more air flow to the sparge pipes with fully opened valves. The air distribution across the width of the biozone can be tuned to give an even distribution by applying fine adjustments of the sparge pipe valves.

The following is of particular importance during maintenance operations where it may be necessary to direct the output of the blower down one sparge pipe to clear a blockage or check the operation of the plant. **Always ensure that at least one sparge pipe ball valve is in an open position on each of the manifolds as a minimum. NEVER close both manifold shut off vales completely while the blower is running**; this could cause a failure of the blower or damage the manifolds. Additionally always check that the manifold shut off valves are opened when starting the plant from a shut-down state.

Airlifts

Principle of Operation

An airlift works by aerating the liquid in a tube and causing this mixture to be less dense than the surrounding water. Thus the aerated liquor moves up the tube by the pressure of the surrounding non-aerated water which forces it to rise. There is a limit to the depth at which an airlift will be effective.

Forward feed

The forward feed should **not** be set to operate for too long otherwise it can hydraulically overload the design of the plant. A nominal setting for each plant should be 30seconds every 20minutes or 1minute in 40minutes. The forward feed provides a balancing function, lowering the primary tank so that peak flows to the bio-zone are smoothed out.

Humus tank return

The humus or final settling tanks have material that needs settling as part of the biological process of the treatment of wastewater. The spent biomass needs to be returned to the primary tank for co-settlement. The returned liquor also has the effect of providing some oxygen to the primary tank so that it does not behave as a septic tank. A nominal setting for the Humus tank return is 30 seconds every 30minutes or 1minute every hour.

Plant Start-up / Shutdown Procedures

Start-up and Commissioning

The unit should be commissioned before sewage is allowed to enter the system.

Electrical connections and cabling should be checked by a qualified electrician.

Check that the overload setting on the starter has the correct value, as shown in the SPECIFICATIONS section of this manual.

Fill the unit with clean water until there is a discharge from the outlet. This is best done by using a hosepipe in the inlet manhole or by running several taps in the connected household(s).

Check that the Thermostat Controls have not been changed from the below factory set settings'

TH1 is the ventilation fan thermostat, this should be set @ 25 degrees centigrade.

TH2 is a reset thermostat and should be set @ 35 degrees centigrade.

TH3 is a high temperature cut off thermostat and should be set @ 40 degrees centigrade.

This is used to shut down the blower if the kiosk temperature exceeds 40 degrees, the blower will not restart until the temperatures drop back down to 35 degrees or below.

Switch on the main power supply to the Blower, the Blower should run continuously.

Continue filling with water until a continuous flow discharges from the outlet.

Checked by.....Signature.....

The Treatment Plant is now operational. However, the process relies on the growth of micro-organisms in the Biological Zone. The time taken for these naturally occurring organisms to develop is dependent on temperature and is typically between 6 to 8 weeks; however, this may be up to six months in winter. When the biology has 'matured' in this way, the treatment process will be completely established. During this time, do not allow any strong cleaning agents or bleaches to enter the system.

Shutdown Procedure

Temporary absence of flow will not be detrimental as the Blower will continue to recycle flows within the system. However, in circumstances where the flow may be interrupted for more than 2 MONTHS, the plant should be shut down by the following procedure:

1. De-sludge the system in accordance with the instructions in the MAINTENANCE SCHEDULE section of this manual.
2. Refill the system with clean water as described above.
3. Switch off the mains supply.

Maintenance Schedule

IMPORTANT! PLEASE READ HEALTH AND SAFETY INSTRUCTIONS BEFORE ATTEMPTING TO WORK ON THE SYSTEM.

Primary Tank De-sludging.

NOTE: This operation is required at different intervals depending upon specific site conditions (plant loading) and effluent discharge standards. This section requires de-sludging at the intervals detailed in Table 1 Design, Dimensions & Designation (generally 60 days for larger plant).

De-sludge the Primary stage (and Humus stage if necessary) using a conventional suction tanker (see Appendix C for further details).

Remove the manhole covers from the tank. Ensure that all openings are adequately guarded. Insert the suction hose from the tanker into the compartments of the primary stage and remove all the contents.

To desludge the Humus tank insert the suction hose and remove the humus from the top and bottom of the tank. This compartment shall not be left empty.

After desludging, it is ESSENTIAL that the **Primary tank (and humus tank where applicable)** is refilled with Clean Water, as quickly as possible

Operation Inspections

Weekly

- Check the operation of the Blower. Remove the manhole cover over the central bio-zone and confirm that aerated liquor is being circulated through the media pack. This will be noticed by air bubbles rising in the biozone. If the air distribution is uneven then the air manifold needs to be levelled (see Air Distribution Adjustment in the Installation Section)
- Check and confirm that there are no leaks from the exposed pipework.
- Check the final effluent discharging from the unit. If it is cloudy or contains suspended particles, the humus tank is likely to require desludging.

Six Monthly

- Switch off the power supply and lock out the mains isolator.
- Inspect and clean the air distribution manifold, clean and if necessary replace the blower air filter.
- Ensure that the water level in the biozone is above the media level
- Switch the Isolator to the ON position to resume operation. Ensure that there are no leaks from the delivery pipework.

Integrated filter (Where Provided)

During normal use the integrated filter will not collects particles from the primary tank but may gradually become clogged. Where provided it should be checked every six months as part of the maintenance schedule and cleaning as necessary.

- Cleaning must be performed using a water jet, with the filter placed above the manhole so that waste falls back into the primary tank.
- Maintenance frequency may vary depending on how the filter is used.
- If grease is stuck to the filter, place the filter in a waterproof container and wash with hot water (liquefaction).

Appendix A: Fault Finding

Symptom – Absence of Bubbles in the Biozone

Symptom – Fault	Potential Cause	Remedy
Blowers not running (flashing amber beacon)	Blowers stopped	Check power supply to relevant blower is switched on at the relevant control panel. If switch is on call a qualified electrician.
	Blower starter trip	Switch off the power and reset the MCB. Switch on, and the system should restart automatically. If it does not, switch off the power and call a qualified electrician.
	Blower stops after a short operating period	Check the condition of the blower air supply filter located on the side of the kiosk. The filter includes a pressure sensor that will turn off the blower if the pressure loss across the filter is too high
	Blower tripped due to high heat levels in the kiosk	The blower will restart once the heat level in the kiosk reduces to below a predetermined level. Where the kiosk is fitted with ventilation assist fan it may be necessary to adjust the ventilation fan thermostat.
Absence of Bubbles in a CSAF biozone	Blower tripped due to power cut	Do nothing. When power is restored, the system will restart automatically.
	Supply fault	Switch off the power. Switch on, and the system should restart automatically. If it does not, switch off the power and call a qualified electrician.
	Blocked aeration pipework	Check if blower is running and air is being discharged from the blower pressure release valve. If yes. Stop the blower and investigate the pipework blockage. Check all SAF Tank aeration valves are not closed
Uneven Air Distribution in CSAF tank	Uneven distribution	Adjust the air distribution valves to give an even aeration pattern
	Blocked Aeration Drop Leg(s)	Turn off all but one the vales feeding the drop legs in the SAF biozone exhibiting poor aeration pattern. The increased air pressure in the one remaining in operating drop leg should clear any blockage. Repeat for all other drop legs in the effected zone.
Foaming in the SAF Tanks	Process start up	Natural part of the plant maturation process and will subside over time. If foaming is excessive anti foam agent can be used.

Symptom – Wastewater is backing up (only for integral final effluent pump station)

CAUSES	REMEDY
Final Effluent Lift Pump tripped due to:	
1. Pump Strainer Blocked	Remove the pump and clean the strainer as outlined in the **Maintenance Schedule.** Reset the overload by pushing the reset button inside the starter and switch on. If the overload trips again, there is a fault with the pump and/or the wiring. Contact your supplier or a qualified electrician.
2. Pump Impeller Jammed	Remove the pump as outlined in the Maintenance Schedule and remove the obstruction. Reset the overload by pushing the reset button and switch on. If the overload trips again, there is a problem with the pump and/or wiring. Contact your supplier or a qualified electrician.
3. Power Cut	Do nothing. When power is restored, the system will restart automatically.
4. Supply (MCB tripped)	Switch off the power and reset the MCB. Switch on, and the system should restart automatically. If it does not, switch off the power and call a qualified electrician.

Appendix B: Equipment Specification

Tank

Material Specification:	Glass Reinforced Polyester Resin with interior and exterior Gel Coat, 1: 2.5 Glass/Resin Ratio.
Colour:	GREY GLASS/RESIN

Kiosk

Material Specification:	Fabricated steel powder coated
Dimensions: (max)	See individual datasheet

Blower for SAF N20 range

Plant	CSAF 350	CSAF 400	CSAF 500	CSAF 600
Outlet Connection:	2" threaded	2" threaded	2" threaded	2" threaded
Supply Voltage:	400V 3 phase 50 Hz	400V 3 phase 50 Hz	400V 3 phase 50 Hz	400V 3 phase 50 Hz
Rated Power:	3.0 kW	4.0 kW	8.0 kW	8.0 kW
Kiosk Code Prefix	CSAF-2187B	CSAF-3185B	CSAF-3260B	CSAF-3260C

Blower for SAF N10 range

Plant	CSAF 250	CSAF 300	CSAF 350	CSAF 400	CSAF 500
Outlet Connection:	2" threaded	2" threaded	2" threaded	2" threaded	3" Threaded
Supply Voltage:	400V 3 phase 50 Hz	400V 3 phase 50 Hz	400V 3 phase 50 Hz	400V 3 phase 50 Hz	400V 3 phase 50 Hz
Rated Power:	4.0 kW	8.0 kW	8.0 kW	8.0 kW	8.0 kW
Kiosk Code Prefix	CSAF-3185A	CSAF-3260A	CSAF-3260B	CSAF-3260B	CSAF-3360C

Blower for SAF N05 range

Plant	CSAF 250	CSAF 300	CSAF 350	CSAF 400
Outlet Connection:	2" threaded	2" threaded	3" threaded	3" threaded
Supply Voltage:	400V 3 phase 50 Hz	400V 3 phase 50 Hz	400V 3 phase 50 Hz	400V 3 phase 50 Hz
Rated Power:	8.0 kW	8.0 kW	8.0 kW	8.0 kW
Kiosk Code Prefix	CSAF-3260A	CSAF-3260A	CSAF-3360A	CSAF-3360A

Image for illustration purposes only

Appendix C: De-Sludging Instructions

In multi tank systems the Primary Settling Tank, and in some instances the Humus Tank, can be separate tanks. The standard principle for desludging applies i.e. desludge the primary tank first and the humus tank thereafter if required

Notes:

1. empty the first stage of the primary settlement tank completely
2. if required desludge the top and bottom part of the humus tank section with tanker

Please note that it is ESSENTIAL to refill the primary tank with clean water as quickly as possible after de-sludging.

Two Tank Schemes

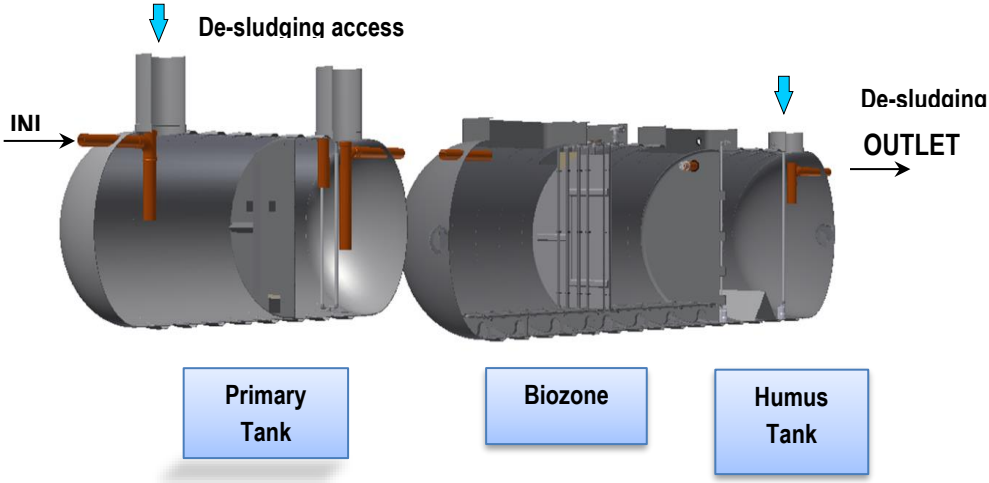

Three Tank Scheme

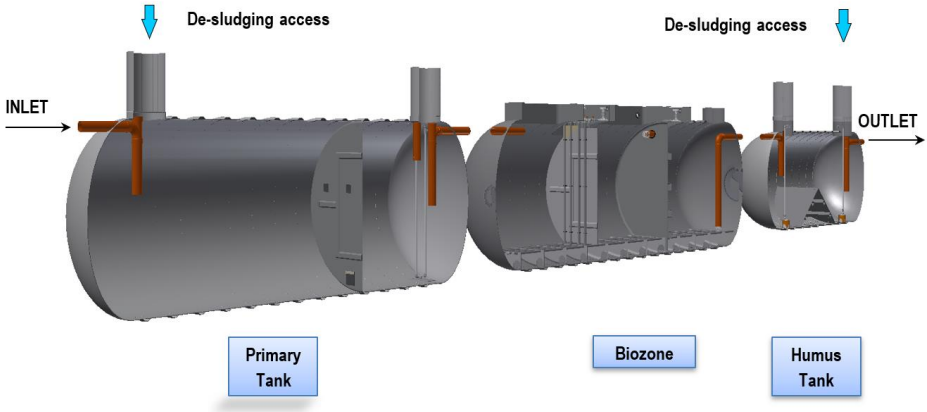

Appendix D: Dimensions

Specification and installation

Superior Technical Performance

The highly successful Rewatec SAF is designed and tested in accordance with BS EN 12566-3 the British Water Code of Practice for Flows and Loads as well as being CE approved.

In standard configuration the plant offers treatment better than a 20mg/L BOD:30mg/L SS: 20mg/L NH_3 effluent quality standard with options for 10 or 5mg/L NH_3 effluent quality and improved BOD and SS quality.

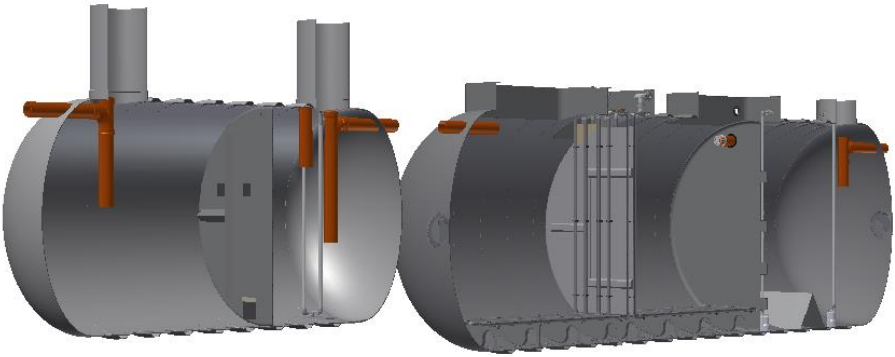

Two Tank Schemes

CSAF N05

PE	Primary Settling Tank			Biozone & Humus Tank		Dry Weather Flow
	Tank Ref	Dia. (m)	Length (m)	Dia.(m)	Length (m)	(m^3/day)
250	PT27	2.5	5.59	3.0	9.94	37.5
300	PT32	2.5	6.97	3.0	11.82	45.0
350	PT36	2.5	7.76	3.0	13.69	52.5

CSAF N10

PE	Primary Settling Tank			Biozone & Humus Tank		Dry Weather Flow
	Tank Ref	Dia. (m)	Length (m)	Dia. (m)	Length (m)	(m^3/day)
250	PT27	2.5	5.59	3.0	8.26	37.5
300	PT32	2.5	6.97	3.0	9.80	45.0
350	PT36	2.5	7.76	3.0	11.33	52.5
400	PT40	2.5	8.60	3.0	13.69	60.0

CSAF N20

PE	Primary Settling Tank			Biozone & Humus Tank		Dry Weather Flow
	Tank Ref	Dia. (m)	Length (m)	Dia. (m)	Length (m)	(m^3/day)
350	PT36	2.5	7.76	2.5	11.95	52.5
400	PT40	2.5	8.60	3.0	10.17	60.0
500	PT50	2.5	10.88	3.0	12.58	75.0

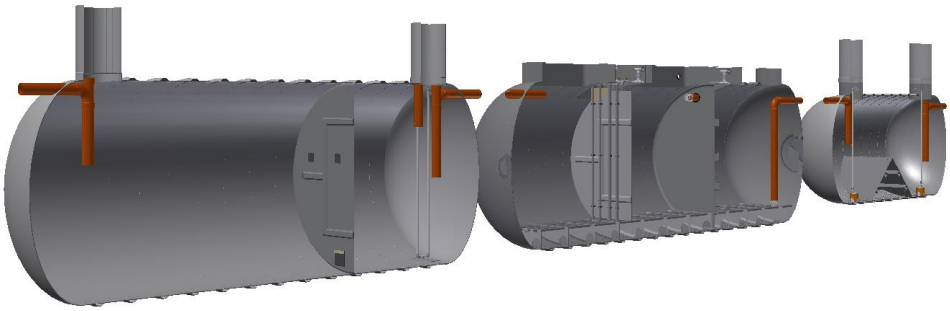

Three Tank CSAF Schemes

PE		Primary Settling Tank			Biozone Tank		Humus Tank			Dry Weather Flow
		Tank Ref	Dia. (m)	Length (m)	Dia.(m)	Length (m)	Tank Ref	Dia. (m)	Length (m)	(m^3/day)
400	N05	PT40	2.5	8.60	3.0	12.00	HM22	2.5	5.01	60.0
500	N10	PT50	2.5	10.88	3.0	11.33	HM30	2.5	6.27	75.0
600	N20	PT60	2.5	12.95	3.0	9.31	HM35	2.5	7.75	90.0

NOTES:

Multi Stream Systems

For larger applications Premier Tech Aquas engineered solutions division offer multi stream systems to meet specific application requirements.

The number and sequence of streams/tanks will be selected by our experienced sales and technical team to meet specific customer requirements. Detailed involvement at an early stage is a must for these applications.

Above Ground Systems

All of the standard and bespoke Conder SAF solutions can be manufactured for above ground installation, please contact the Premier Tech Aqua sales team for more information.

Installation

The Conder SAF Package Sewage Treatment Plant requires a relatively low cost and easy installation process. All Conder SAF plants are manufactured to allow installation with either granular or concrete backfill, with granual backfill providing significant reductions in installation costs.

Premier Tech Aqua work closely with a nationwide network of installation partners and detailed installation guidelines are provided for each product.

All electrical work should be carried out in accordance with current regulations (for example NIC/EIC/Building Regulations).

Peripherals

- **Access shafts (for deeper pipework inverts)**
- **Acoustically lagged control kiosks**
- **Hot climate kiosk**
- **Client specified control panel**
- **Standby blower**
- **Client specified control kiosk**
- **Sample chamber**
- **Phosphate reduction**
- **UV Disinfection**
- **Scada/Telemetry**
- **GMS Dial Out**
- **Tertiary Treatment with coco filter technology**
- **Heavy-duty covers**
- **Final effluent pump station to overcome discharge level issues**
- **Feed pump stations**

Servicing

Premier Tech Aqua recommend that a maintenance agreement is taken out to service the plant. Regular desludging (emptying) of the Primary Tank is also needed to ensure consistent operational efficiency. This should take place at intervals between 60 – 120 days, depending on the size of the plant and the plant loading (see tables within specification section). Premier Tech Aqua can provide access to a nationwide network of British Water Accredited service partners who can offer a comprehensive range of servicing including commissioning and on-going service contracts. Please contact the Premier Tech Aqua sales team for further information.

PREMIER TECH